TSURUMI PUMP
STRONGER FOR LONGER

BER

3-phase
50Hz

Submersible Ejectors

This submersible ejector is composed of a B type pump and a venturi with diffusor trumpet.

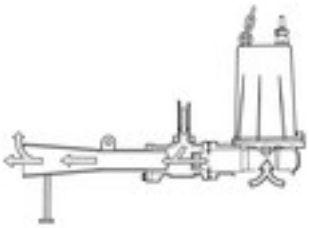

The principle of the ejector system

This system is a combination of a submersible pump and a jet pump.
By the action of the ejection current of the submersible pump, a self-feeding force is generated, which draws air from the surface of the water through an air inlet pipe. This air is mixed with the water and the mixture is ejected. The churning force caused by this ejection current is remarkabley strong, with the result that exceptionally efficient oxygen dissolution is produced.

BER consists of:

- B-Series pump
- Ejector
- Silencer & valve set
- Lifting chain

TOS-BER consists of:

- B-Series pump
- TOS-Ejector
- Silencer & valve set
- Lifting chain

Convection pattern and installation

- Square tank
- Rectangular tank
- Circular tank

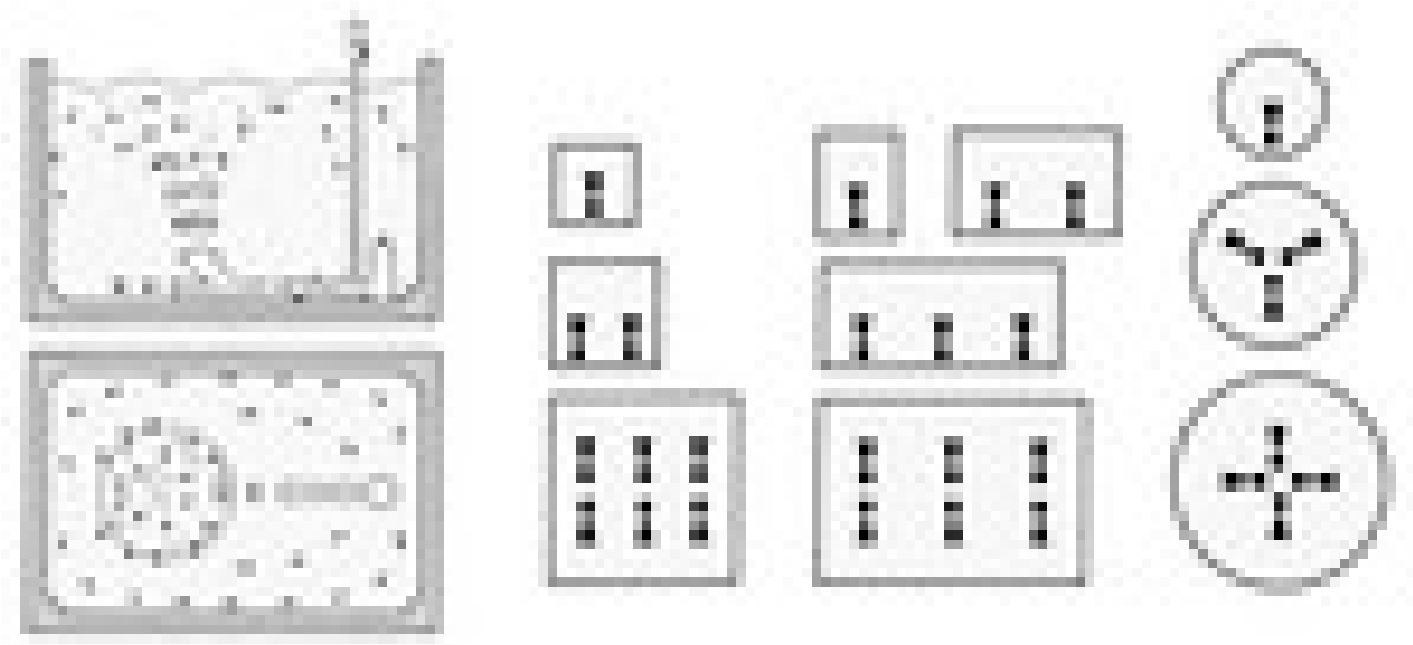

Specifications:

Diameter air pipe mm	Model		Colour code curve	Power output kW	Phases	r.p.m.	Starting method	tank dimensions			Dry weight kg without cable	
	free standing	with guide rail fitting						length max. m	breadth max. m	depth max. m	free standing	with guide rail fitting
25	8-BER	TOS-8BER	1	0,75	3	2850	direct	3,0	2,0	4,0	28,0	23,0
32	15-BER	TOS-15BER	2	1,5	3	2850	direct	4,0	3,5	4,0	43,0	34,0
50	22-BER	TOS-22BER	3	2,2	3	1450	direct	5,0	5,0	4,5	75,0	61,0
50	37-BER	TOS-37BER	4	3,7	3	1450	direct	6,0	6,0	5,0	91,0	77,0
50	55-BER	TOS-55BER	5	5,5	3	1450	direct	7,0	7,0	6,0	149,0	132,0

ø Air inlet			25mm, 32mm, 50mm
Pumping Fluid	Temperature		0-40°C
	Type of Fluid		Municipal sewage, sewage of food industry
Pump	Compo-nents	Impeller	Non-clog impeller
		Shaft Seal	Double mechanical seal
		Bearings	Shielded ball bearings
	Material	Impeller	Grey iron casting EN-GJL-200
		Casing	Grey iron casting EN-GJL-200
		Suction Plate	Grey iron casting EN-GJL-200
		Diffuser	Construction steel DIN1.0040 nylon coated
		Shaft Seal	Silicon carbide in oil bath
Motor	Type, Poles		Induction motor, 2 poles, IP68, 4 poles
	Motor Protector (built-in)		Circle thermal cut-out
	Lubrication		Turbine oil (ISO VG32)
	Insulation		Insulation class E, Insulation class F
	Phase / Voltage		3-phase / 400V / 50Hz / d.o.l.
	Material	Casing	Grey iron casting EN-GJL-150
		Shaft	Stainless steel EN-X6Cr13, Stainless steel EN-X30Cr13
		Cable	Rubber, NSSHÖU
Air pipe connection			Inside thread, flange

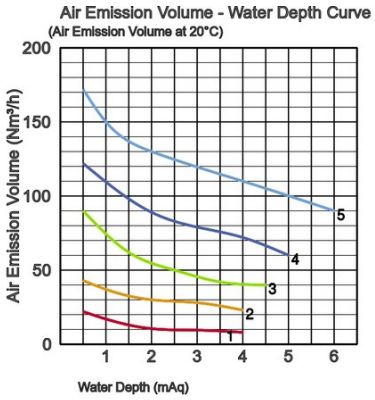

Dimensions in mm:

Model	A	A1	A2	D	D1	D2	H	H1	H2
8-BER	674	377	297	194	150	180	464	195	150
15-BER	895	537	358	222	150	180	562	224	159
22-BER	1158	687	471	317	220	260	679	312	232
37-BER	1158	687	471	317	220	260	753	312	232
55-BER	1415	861	554	391	220	260	942	341	256

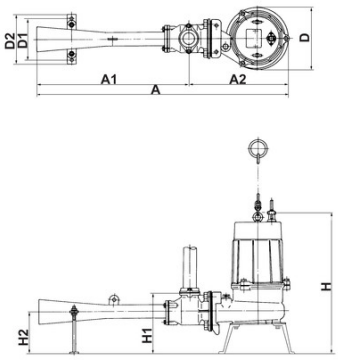

Please mind: discharge bend, duck foot bend and stand set are accessories and must be ordered separately

Dimensions - guide rail fitting type in mm:

Model	A1	A2	A3	A6	D1	D2	H	M1	M2
8-BER	288	97	238	289	97	97	514	500	400
15-BER	-	-	-	-	-	-	-	-	-
22-BER	462	154	367	546	150	167	768	700	450
37-BER	462	154	367	546	150	167	768	700	450
55-BER	517	194	422	711	188	203	1006	750	500

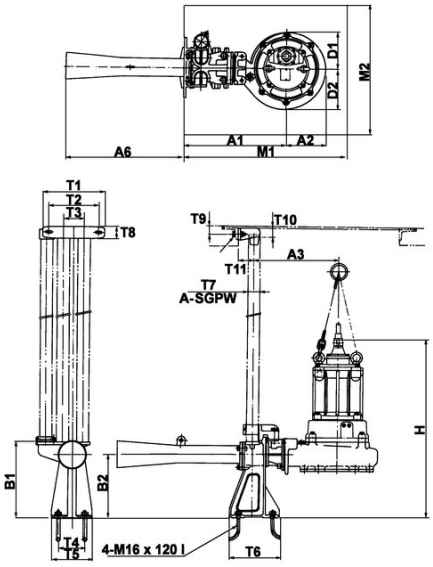

Air pipe mm	T1	T2	T3	T4	T5	T6	T7	T8	T9	T10	T11	B1	B2
25mm	230	245	70	70	110	170	25	50	49	53	50	238	200
32mm	-	-	-	-	-	-	-	-	-	-	-	-	-
50mm	230	245	70	70	110	170	25	50	49	53	50	238	200

Tsurumi (Europe) GmbH

Wahlerstr. 10
D-40472 Düsseldorf
Tel.: +49 (0)211-4179373
Fax: +49 (0)211-417937-480
Email: sales@tsurumi.eu
www.tsurumi.eu

We reserve the right to change specifications and designs herein for improvement without prior notice. Our pumps are for professional use only. In the event that Tsurumi (Europe) GmbH have, in exceptional cases taken over, a manufacturer's warranty, this entitles the enduser to assert remedy free of charge against Tsurumi (Europe) GmbH due to any defect to the product occurring during the guarantee period (see below), also then when the warranty claims against the seller do not or no longer exist. In the event of malfunction, which is attributable to the improper handling by the enduser, no guarantee claim shall arise. Further claims shall not result from the warranty, unless if something to the contrary has explicitly been determined. The decision as to whether remedy is effected by way of replacement or repair shall be at the choice of Tsurumi (Europe) GmbH. The claims shall be time barred after a period of three months after expiry of the guarantee period, however, not before expiry of the warranty period which is valid towards the seller. In the event of doubt, the warranty period shall correspond with the warranty period which is valid between the end-user and his seller.

sev-BER-EN